FN Rosettes

Product Range Overview
2023/2024

www.fnprofile.com

Plastic adhesive rosettes

Simple adhesive rosettes made from printed plastic film with adhesive tape on the back. The adhesive rosette is slotted on one side and can be quickly and easily installed around the heating pipe.

Design: printed.
Sizes: 15mm / 19/32".
Print: possible in the most diverse types of wood (birch, beech, oak, rustic oak).
Packaging: in a carton of 10 self-service packs

Product advantages:

- Quick and easy to use.
- Extremely flat solution.
- Self-adhesive.
- Possible in various decors, adapted to the floor.

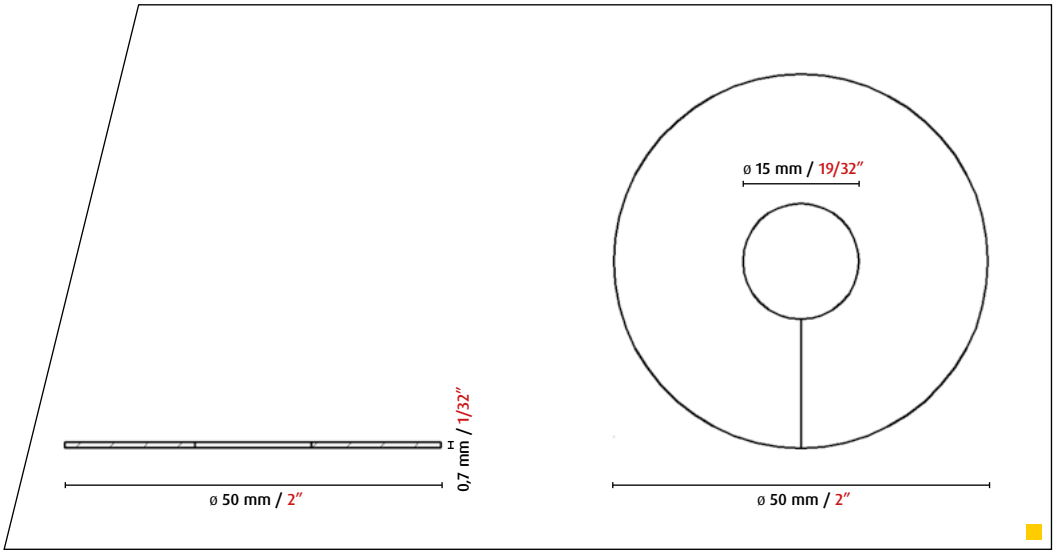

Plastic Rosettes

A radiator rosette for 3 different pipe diameters. Grooving on the back makes it very easy to adapt to adjust the rosette to the diameter of the heating pipe.

Design: printed or plain.
Sizes: 15 mm / 19/32", 19 mm / 3/4", 22 mm / 7/8".
Print: in the types of wood: oak beech, maple, cherry, mahogany (merbau).
Single colours: gold, silver, white, beige, brown.
Packaging: in a carton of 10 self-service packs our in PE packs of 50 pieces

Product advantages:
- One rosette for 3 diameters.
- Eccentric hole, therefore also suitable for suitable for pipes lying next to each other.
- Available printed or unprinted.

Heating pipe cover

Drilling: 15 mm / 19/32"
19 mm / 3/4"
22 mm / 7/8"

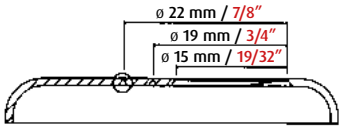

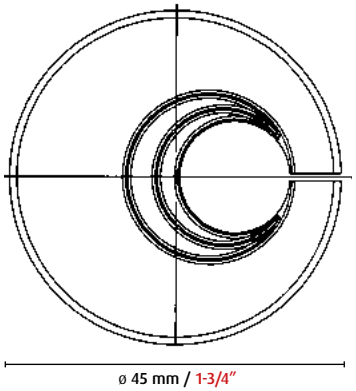

Simple Rosettes

A clean finish where the heating pipe meets the floor. No glue necessary: simply plug the elements together thanks to the form-fitting design.

Design: surface treated wood.
Sizes: 15 mm / 19/32", 19 mm / 3/4", 22 mm / 7/8".
Type of wood: oak, beech, ash, maple, cherry, mahogany (merbau), cork, lacquered (white).
Packaging: in a carton of 10 self-service packs or in PE packs of 50 pieces

Product advantages:
- Real wood rosette.
- No gluing necessary due to dovetail connection. Simply plug it together.
- Lacquered surface.

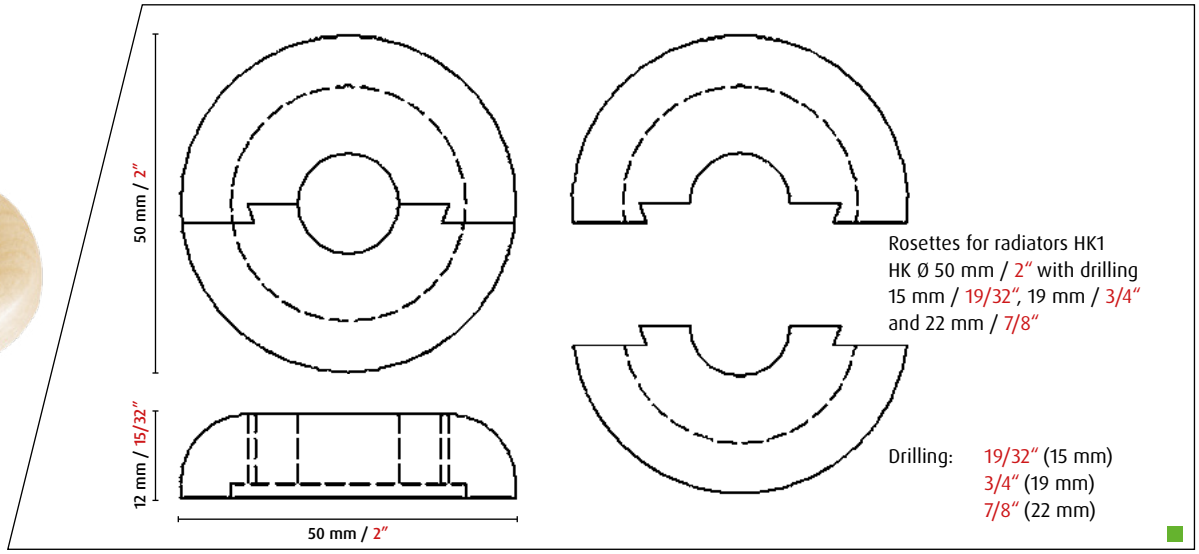

Rosettes with adjustment rings

A visually clean border for the heating pipe, complete with adjustment rings for the most common pipe diameters, allowing for easy placement into the rosette.

Design: surface-treated wood.
Sizes: 12 mm / 15/32", 15 mm / 19/32", 19 mm / 3/4", 22 mm / 7/8".
Type of wood: oak, beech, ash, maple, cherry, mahogany (merbau). lacquered (black and white).
Packaging: in a carton of 10 self-service packs or in PE packs of 50 pieces

Product advantages:
- 1 belt rosette with 4 inserts, dependin on the tube diameter.
- Visually appealing skin packaging on cardboard card

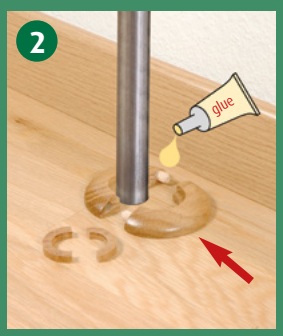

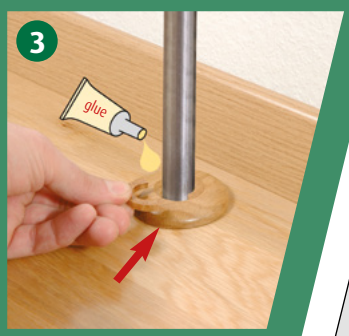

FN NEUHOFER

WE. KNOW. WOW!

Wir arbeiten kontinuierlich an der Zukunft. Denn Fortschritt kann nur dort entstehen, wo man sich nicht mit dem Erreichten zufrieden gibt und stets unaufhaltsam auf Expansionskurs bleibt. Für uns steht deshalb neben 100%iger Kundenzufriedenheit in allen Bereichen der Innovationsgedanke an erster Stelle. Wir verfügen über umfassendes Know-how, um immer neue Wege zu gehen und vielseitige, richtungweisende Lösungen für höchste Anforderungen zu entwickeln. Nur durch diese Einstellung, gepaart mit technologischem Vorsprung, kann eine Vielzahl einzigartiger Qualitätsprodukte mit einem absolut hervorragenden Preis-Leistungs-Verhältnis entstehen.

We are continually working on the future. Because progress can only occur when people are not satisfied with what has already been achieved and always remain on a relentless expansion course. In addition to 100 % customer satisfaction in all areas, the concept of innovation is therefore always uppermost in our minds. We possess comprehensive know-how in order to always break new ground and develop versatile, trend-setting solutions for the most exacting of requirements. Only with this attitude, coupled with technological advances, can a multitude of unique quality products be created with an absolutely outstanding price-performance ratio.

Nous travaillons continuellement pour l'avenir. Car le progrès ne peut exister que si on ne se satisfait jamais de ce qui existe et que si l'on reste attentif aux évolutions de l'expansion. Pour cette raison, en plus de la satisfaction à 100 % des clients dans tous les domaines, c'est l'esprit d'innovation qui vient en première place. Nous disposons d'un énorme savoir-faire pour suivre de nouvelles voies et développer des solutions d'avenir pour répondre aux exigences les plus élevées. Cette façon de voir les choses couplée à une avancée technologique nous permet de créer une multitude de produits de qualité, uniques en leur genre, avec un rapport qualité/prix absolument exceptionnel.

Trabajamos permanentemente en el futuro. Porque solo puede haber progreso cuando uno no se conforma con lo conseguido y nada le detiene en su expansión. Por ello, para nosotros, lo más importante es, además de conseguir una satisfacción del cliente del 100% en todos los ámbitos, no dejar de pensar en la innovación. Disponemos de una amplia experiencia y conocimientos para encontrar siempre nuevas vías que seguir y desarrollar soluciones versátiles que marcan tendencia para los requisitos más exigentes. Solo así, junto con los avances tecnológicos, puede conseguirse tal cantidad de productos de calidad únicos con una relación calidad-precio absolutamente sobresaliente.

Neuhofer Holz GmbH, A-4893 Zell am Moos, Haslau 56
Tel.: +43 (0)6234/8500 - 0, Fax: +43 (0)6234/8500 - 34
office@fnprofile.com, www.fnprofile.com